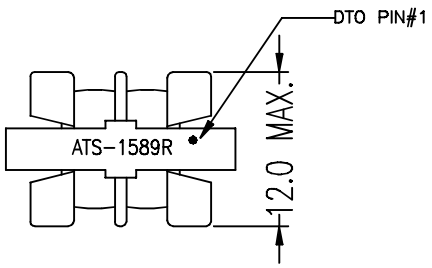

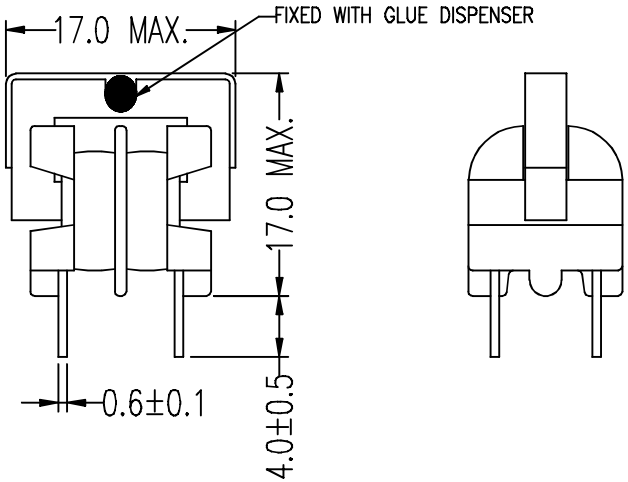

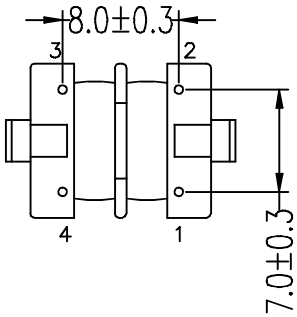

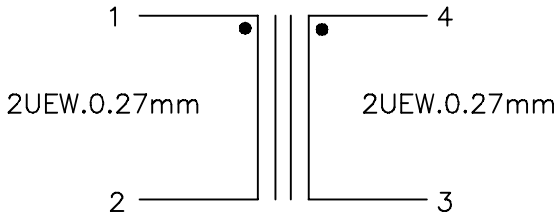

ELECTRICAL CHARACTERISTICS :

1. DCR : PIN 1–2 = 4–3 = 780mΩ MAX.

2. INDUCTANCE (@1KHz, 1Vrms) :
   PIN 1–2 = 11mH MIN.
   PIN 4–3 = 11mH MIN.

3. TURN RATIO (@20kHz, 1Vrms) :
   PIN 1–2 : PIN 4–3 = 1 ±3%.

4. HI–POT (@1500VAC, 5mA, 3SEC) : PIN 1–4
   (@500VAC, 5mA, 3SEC) : PRI–CORE
   SEC–CORE

5. RoHS COMPLIANT

NO:	DESCRIPTION	DATE	BY	CHK	APPD
	RELEASE				

REVISIONS

AOEM.

TITLE COMMON CHOKE

DWG. NO. ATS-1589R

UNITS:

SAFETY

SHEET 1 OF 1

DATE

P/N:

DRAW